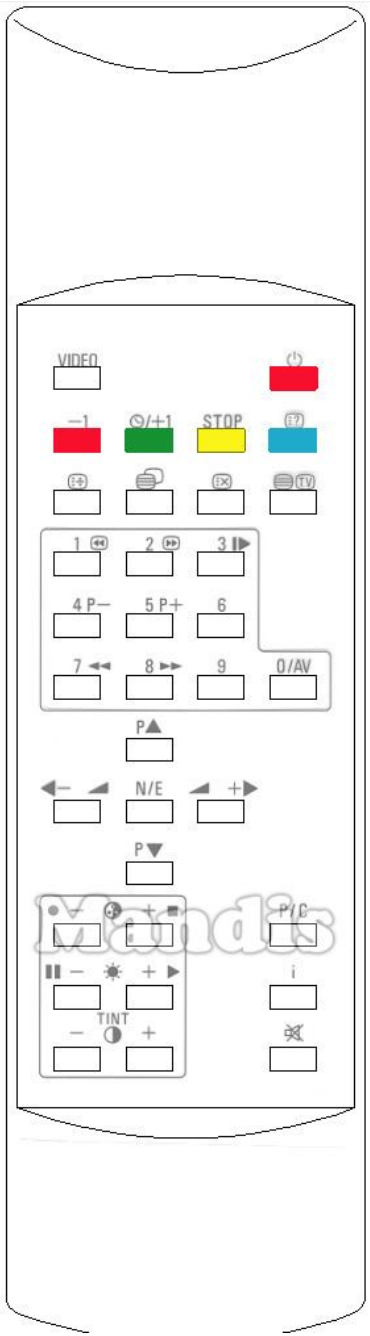

Original		Replacement	
	Power		Power
	Red	NETFLIX SEARCH	Red / Netflix / Search
	Green	APP REPEAT	Green / APP / Repeat
STOP	Yellow	YouTube REPEAT A-B	Yellow / YouTube / Repeat
	Blue	Prime Video RANDOM	Blue / Prime Video / Random
	[=+]	OPT-TOOLS SETUP	Setup / OPT /
	[/=]	RDS AV INPUT	AV / Input / RDS
	[=x]	FORMAT PICTURE	Picture / Format
	[=]	GOTO TEXT	Text / Goto
1	1	TV 1	1
2	2	DVD 2	2
3	3	CD - STB 3	3
4 P–	4	VIDEO 4	4
5 P+	5	TAPE 5	5
6	6	TUNER 6	6
7	7	AUX - HDD 7	7
8	8	USB 8	8

Original		Replacement	
9	9	BLUETOOTH 9	9
0/AV	0/AV	HDMI - SAT 0	0
P▲	P+	+ CH PAGE	CH+ / Page+
P▼	P-	CH PAGE –	CH- / Page-
	Vol+	+ VOL	Vol+
	Vol-	VOL –	Vol-
N/E	N/E	OK	OK
	Right		Right
	Left		Left
P▲	Up		Up
P▼	Down		Down
P/C	P/C	RETURN BACK	Back / Return
i	i	ANGLE INFO	Info / Angle
	Mute	DIMMER MUTE	Mute / Dimmer
	Color-	TUNE-	<< / Tune-
	Color+	TUNE+	>> / Tune+
	Brightness-	PRESET-	I<< / Preset-

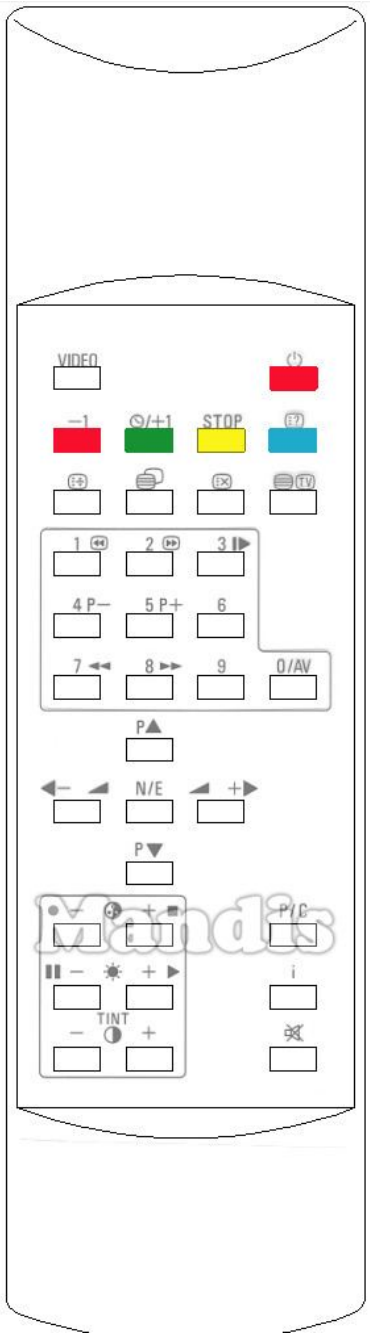

Original	Replacement	Original	Replacement
Brightness+	>>I / Preset+		
Tint-	Display / Media		
Tint+	Smart / List		

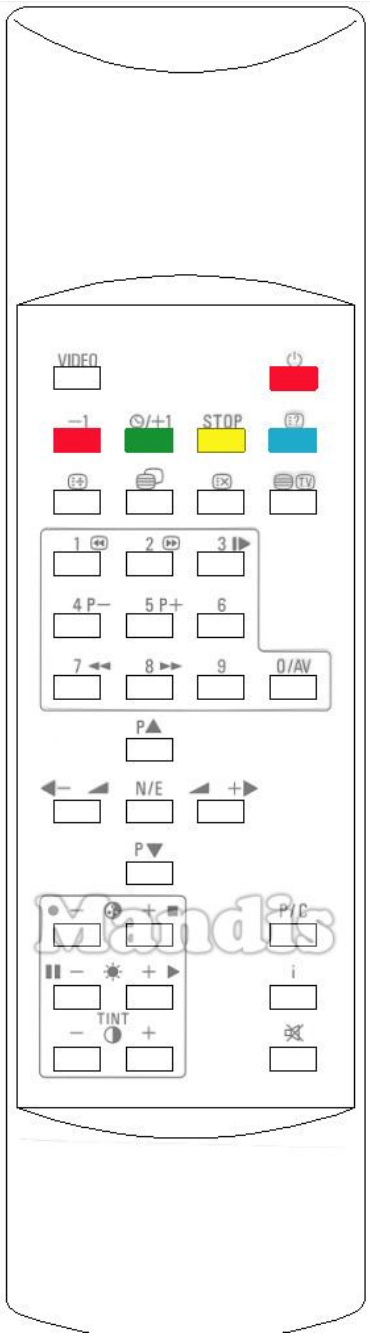

Original	Replacement
Power	Power
Red	Red / Netflix / Search
Green	Green / APP / Repeat
Yellow	Yellow / YouTube / Repeat
Blue	Blue / Prime Video / Random
0/AV	0
Vol+	Vol+
Vol-	Vol-
P+	CH+ / Page+
P-	CH- / Page-
Down	Down
Up	Up
N/E	OK
Right	Right
Left	Left
i	Info / Angle
Mute	Mute / Dimmer

Original	Replacement
Rec	Rec / Rec Mode
Stop	Stop / Hold
Pause	Pause / Step / Freeze
Play	Play / Slow
Tint-	Display / Media
Tint+	Smart / List
<<	<< / Tune-
>>	>> / Tune+
I>	Zoom / Size
I<<	I<< / Preset-
>>I	>>I / Preset+